Systematic feedback (recursive) encoders

- $\mathbf{G}'(D) = [1, (1 + D^2) / (1 + D + D^2), (1 + D) / (1 + D + D^2)]$
- Infinite impulse response (not polynomial)
  - Easier to represent in transform domain
- Sometimes referred to as systematic recursive convolutional code (SRCC). But note that the feedback is an encoder property

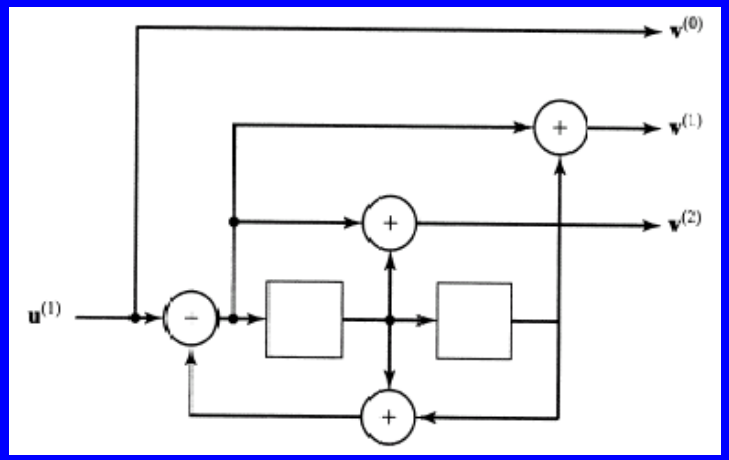

Example

$$\mathbf{G} = \begin{pmatrix} 1 & 0 & 1 & 1 & 1 & 1 & & & & \\ 0 & 1 & 1 & 1 & 0 & 0 & & & & \\ & & & 1 & 0 & 1 & 1 & 1 & 1 & \\ & & & 0 & 1 & 1 & 1 & 0 & 0 & \\ & & & & & & \ddots & \ddots & \ddots & \ddots \end{pmatrix}$$

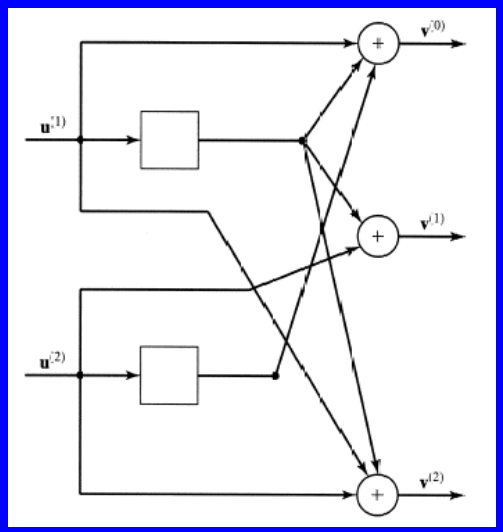

$$\mathbf{G}(D) = \begin{pmatrix} 1+D & D & 1+D \\ D & 1 & 1 \end{pmatrix}$$

$$\rightarrow \begin{pmatrix} (1+D)/(1+D) & D/(1+D) & (1+D)/(1+D) \\ D & 1 & 1 \end{pmatrix}$$

$$\rightarrow \begin{pmatrix} 1 & D/(1+D) & 1 \\ D+D & 1+D^2/(1+D) & 1+D \end{pmatrix} \rightarrow \begin{pmatrix} 1 & D/(1+D) & 1 \\ 0 & \dfrac{(1+D+D^2)(1+D)}{(1+D)(1+D+D^2)} & \dfrac{(1+D)(1+D)}{(1+D+D^2)} \end{pmatrix} \rightarrow \begin{pmatrix} 1 & 0 & \dfrac{1}{1+D+D^2} \\ 0 & 1 & \dfrac{1+D^2}{1+D+D^2} \end{pmatrix}$$

Example (cont.)

Controller canonical form

$$\mathbf{G}'(D)=\begin{pmatrix} 1 & 0 & \dfrac{1}{1+D+D^2} \\ 0 & 1 & \dfrac{1+D^2}{1+D+D^2} \end{pmatrix}$$

$$\mathbf{H}'(D)=\begin{pmatrix} \dfrac{1}{1+D+D^2} & \dfrac{1+D^2}{1+D+D^2} & 1 \end{pmatrix}$$

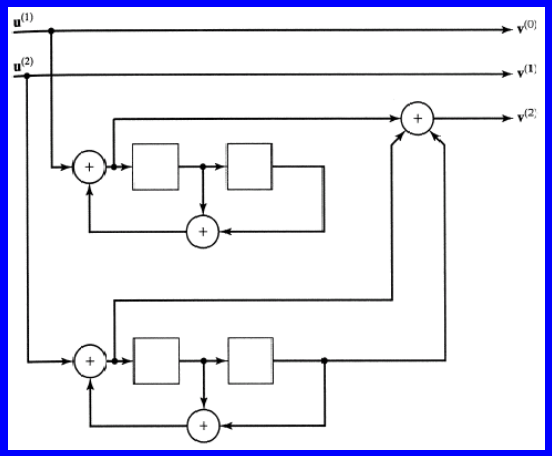

Observer canonical form

$$\mathbf{G}'(D)=\begin{pmatrix} 1 & 0 & \dfrac{1}{D^2+D+1} \\ 0 & 1 & \dfrac{D^2+1}{D^2+D+1} \end{pmatrix}$$

$$\mathbf{H}'(D)=\begin{pmatrix} \dfrac{1}{D^2+D+1} & \dfrac{D^2+1}{D^2+D+1} & 1 \end{pmatrix}$$

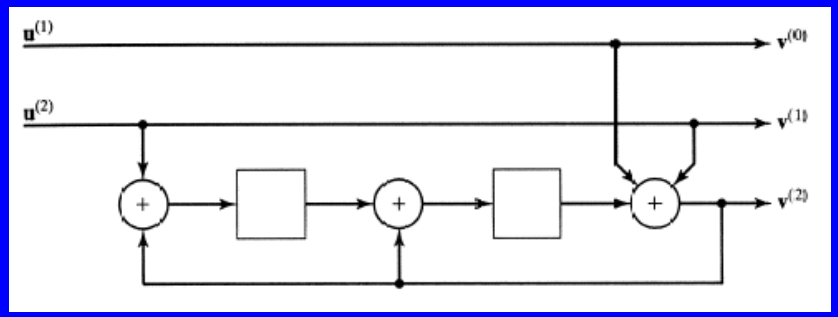

Some notes on minimality

a) For rate $1/n$ codes, there is a minimal encoder is in controller canonical form provided common factors are removed from $\mathbf{G}(D)$ (or $\mathbf{G}'(D)$)
   - Why:
     - $k = 1$, only one row of polynomials
     - If common factors are not removed:
       - $\mathbf{G}(D) = [1 + D^2, 1 + D^3]$ (ν=3), but after dividing by $1+D$
       - $[1 + D, 1 + D + D^2]$ (ν=2)

b) For rate $(n-1)/n$ codes, there is a minimal encoder in observer canonical form corresponding to a systematic recursive encoder $\mathbf{G}'(D)$, provided
   - all common factors are removed from $\mathbf{H}(D)$, corresponding to the systematic rational function parity check matrix $\mathbf{H}'(D)$ derived from $\mathbf{G}'(D)$, and
   - all functions in $\mathbf{G}'(D)$ are realizable (delay of denominator exceeds delay of numerator)
   - Why:
     - $k = n - 1$, only one row of polynomials in $\mathbf{H}(D)$

c) For rate k/n: More difficult

Example: Nonsystematic feedback encoder

$$\mathbf{G}(D) = \begin{bmatrix} 1/(1+D+D^2) & D/(1+D^3) & 1/(1+D^3) \\ D^2/(1+D^3) & 1/(1+D^3) & 1/(1+D) \end{bmatrix}$$

We need a common denominator in each row for the feedback of the shift registers:

$$\mathbf{G}'(D) = \begin{bmatrix} (1+D)/(1+D^3) & D/(1+D^3) & 1/(1+D^3) \\ D^2/(1+D^3) & 1/(1+D^3) & (1+D+D^2)/(1+D^3) \end{bmatrix}$$

Controller canonical form

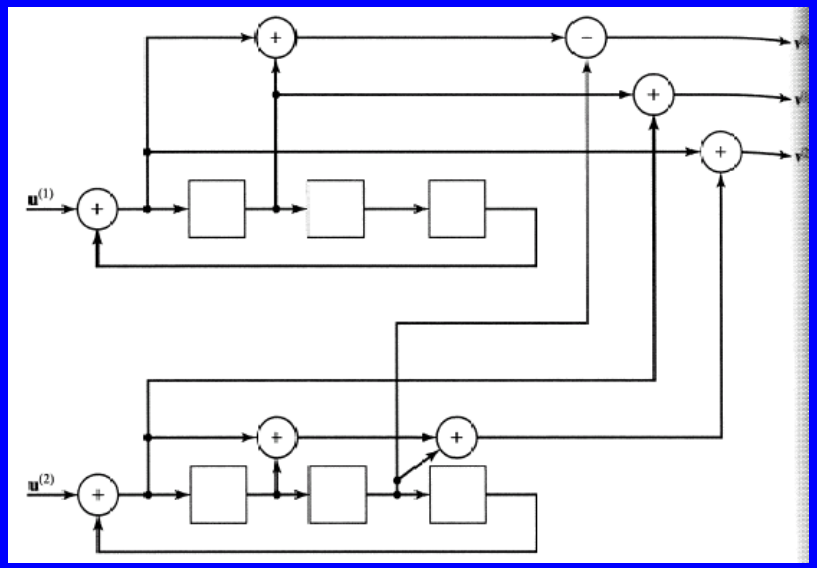

Observer canonical form

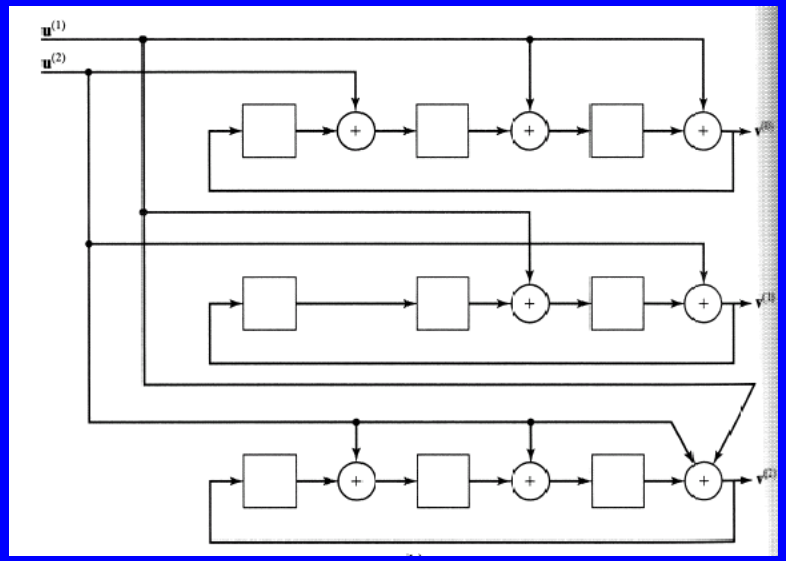

Summary

a) Any rate $1/n$ code can be represented by a minimal feedforward encoder $\mathbf{G}(D)$, or its rational systematic counterpart

b) Any rate $(n\text{-}1)/n$ code can be represented by a minimal systematic feedback matrix $\mathbf{H}(D)$, or its polynomial counterpart

Feedforward encoder inverse

a) What if we want an encoder inverse; i.e. a way to find an estimate of the information by inverting the received word without decoding?

b) Systematic encoders: Easy. Nonsystematic encoders?

c) Recall: $\mathbf{V}(D) = \mathbf{U}(D)\,\mathbf{G}(D)$

d) Then, we need an inverse matrix $\mathbf{G}^{-1}(D)$ such that $\mathbf{G}(D)\,\mathbf{G}^{-1}(D) = \mathbf{I}\,D^l$

e) Then, $\mathbf{V}(D)\,\mathbf{G}^{-1}(D) = \mathbf{U}(D)\,\mathbf{G}(D)\,\mathbf{G}^{-1}(D) = \mathbf{U}(D)\,\mathbf{I}\,D^l = \mathbf{U}(D)\,D^l$

f) When does a feedforward inverse exist?

g) Rate $1/n$ code: A feedforward inverse exists iff

- GCD $\{\mathbf{g}^{(0)}(D), \mathbf{g}^{(1)}(D), \ldots, \mathbf{g}^{(n-1)}(D)\} = D^l$

h) Rate k/n code: A feedforward inverse exists iff

- GCD $\{\Delta_i(D)\} = D^l$
- where $\{\Delta_i(D)\}$ is the set of all determinants of $k \times k$ submatrices

Example

a) $\mathbf{G}(D) = [1 + D^2 + D^3, 1 + D + D^2 + D^3]$

b) GCD $\{1 + D^2 + D^3, 1 + D + D^2 + D^3\} = 1$

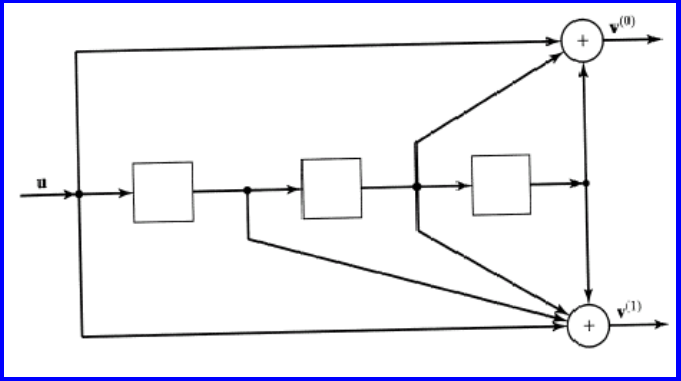

$$\mathbf{G}^{-1}(D) = \begin{pmatrix} 1 + D + D^2 \\ D + D^2 \end{pmatrix}$$

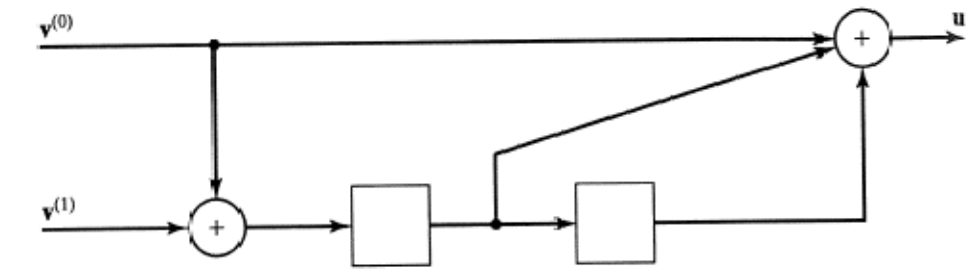

Example

$$\mathbf{G}(D)=\begin{pmatrix} 1+D & D & 1+D \\ D & 1 & 1 \end{pmatrix}$$

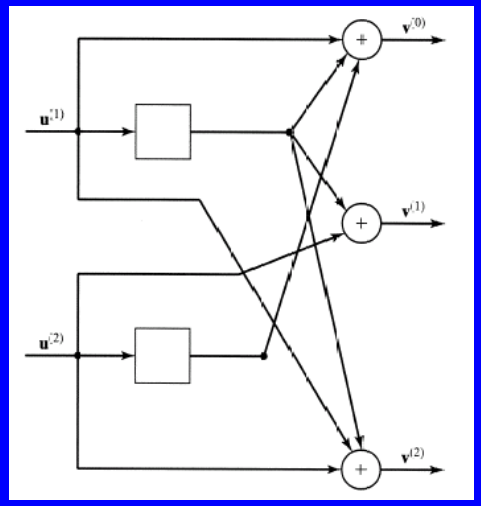

$$\mathrm{GCD}\left\{1+D+D^2, 1+D+D+D^2, D+1+D\right\}=1$$

$$\mathbf{G}^{-1}(D)=\begin{pmatrix} 0 & 0 \\ 1 & 1+D \\ 1 & D \end{pmatrix}$$

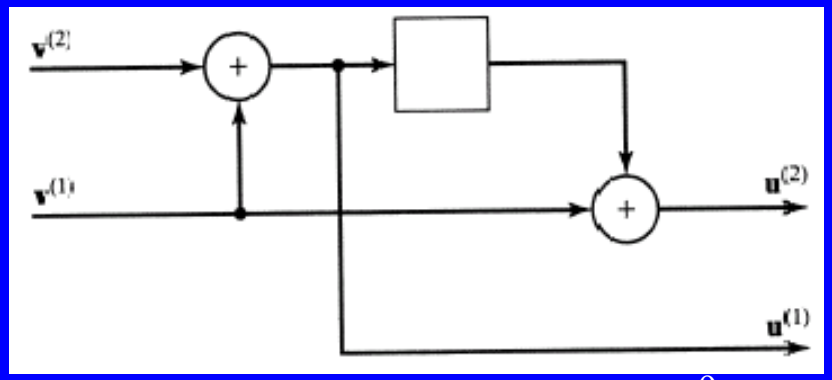

Example 11.10: Catastrophic encoder

a) $\mathbf{G}(D) = [1 + D, 1 + D^2]$

b) GCD $\{1 + D, 1 + D^2\} = 1 + D$

c) There is no feedforward inverse

d) Example: $\mathbf{U}(D) = 1 / (1 + D) = 1 + D + D^2 + D^3 + \ldots$

- will correspond to the codeword
  $\mathbf{V}(D) = \mathbf{U}(D)\,\mathbf{G}(D) = 1 / (1 + D)\,[1 + D, 1 + D^2] = (1, 1 + D)$
- Infinite input weight implies finite output weight
- A catastrophic encoder

e) Must not be used

f) Minimal encoders and systematic encoders are non-catastrophic

Structural properties

a) From now on we assume a minimal encoder

b) The state diagram:

- State: Describes the content of the encoder's memory elements
  - Implies a natural state labeling
- State transitions: Describe what happens when a k-bit input block arrives when the encoder is in a given state
  - Direction: What will be the new state?
  - Label: Which n output bits are produced?

Example

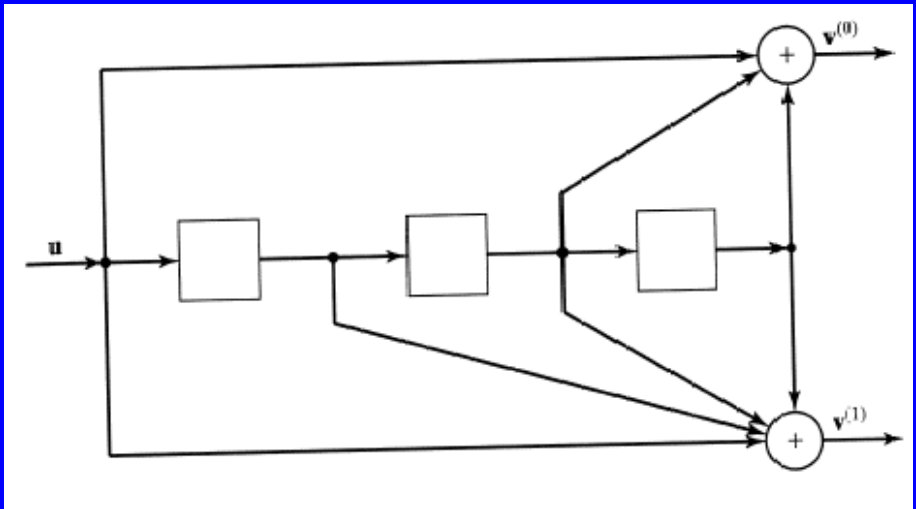
u
$v^{(0)}$
$v^{(1)}$

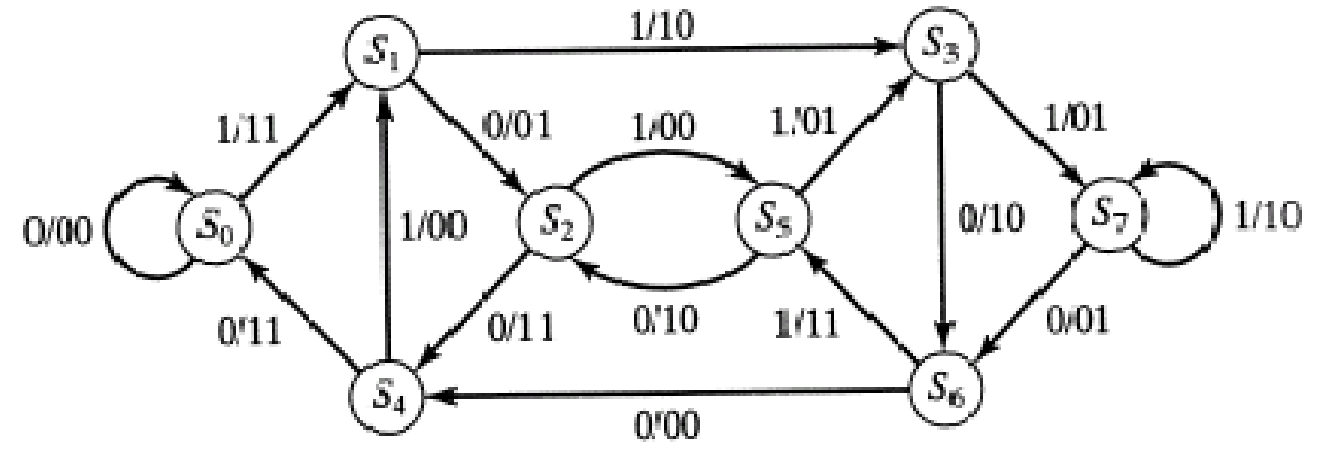
S_0
S_1
S_2
S_3
S_4
S_5
S_6
S_7
0/00
1/11
0/11
1/00
0/01
1/10
1/00
0/11
0/10
1/01
1/11
0/00
1/01
0/10
0/01
1/10

Example

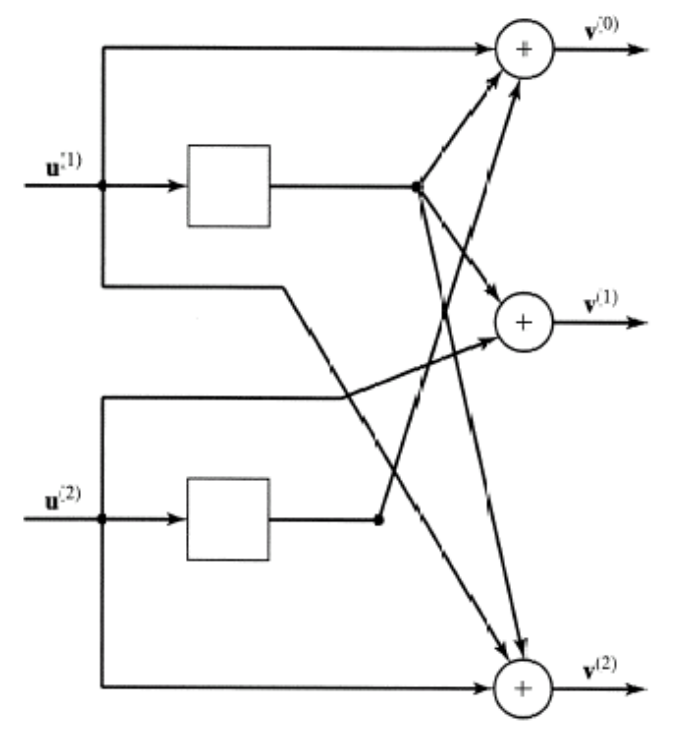
$\mathbf{u}^{(1)}$
$\mathbf{u}^{(2)}$
$\mathbf{v}^{(0)}$
$\mathbf{v}^{(1)}$
$\mathbf{v}^{(2)}$

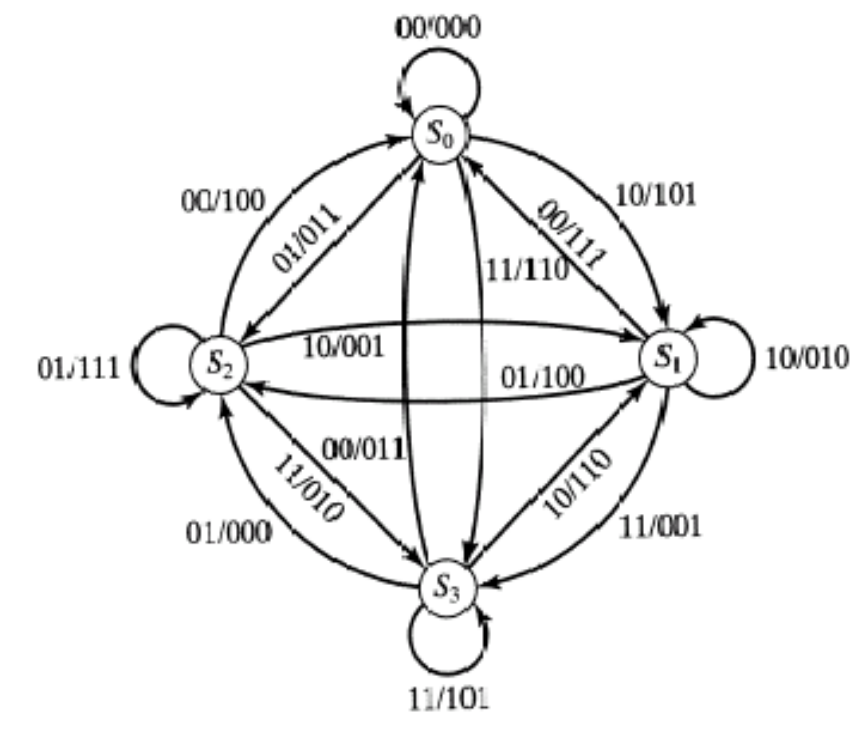
00/000
S_0
00/100
01/011
10/101
00/111
11/110
01/111
S_2
10/001
S_1
10/010
01/100
00/011
11/010
10/110
01/000
11/001
S_3
11/101

Example: Catastrophic encoder

a) $\mathbf{G}(D) = [1 + D, 1 + D^2]$

b) GCD $\{1 + D, 1 + D^2\} = 1 + D$

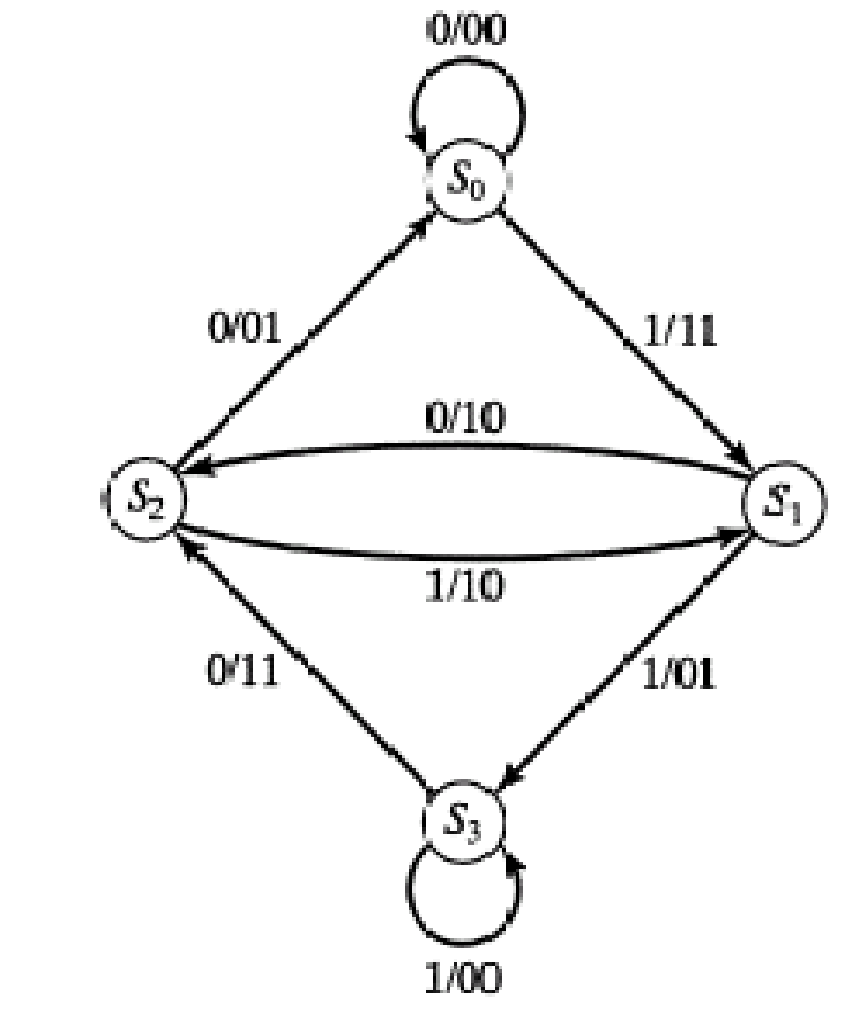

Weight enumerator function

a) A codeword weight enumerating function (WEF) is an expression that completely describes the weights of all codewords

b) The WEF is a code (not encoder specific) property

c) The WEF can be derived by inspection of the state diagram with some enhancements as follows:

- Split state S_0 into an initial and a terminal state
- The zero-weight branch around state S_0 is deleted
- Label each branch by X^d, where d is the Hamming weight of the n-bit output block corresponding to the branch

d) The path gain of a particular path is the product of the branch gains over the path. Thus, the Hamming weight of the path is the power of X in the path gain

Modified state diagrams for WEF determination

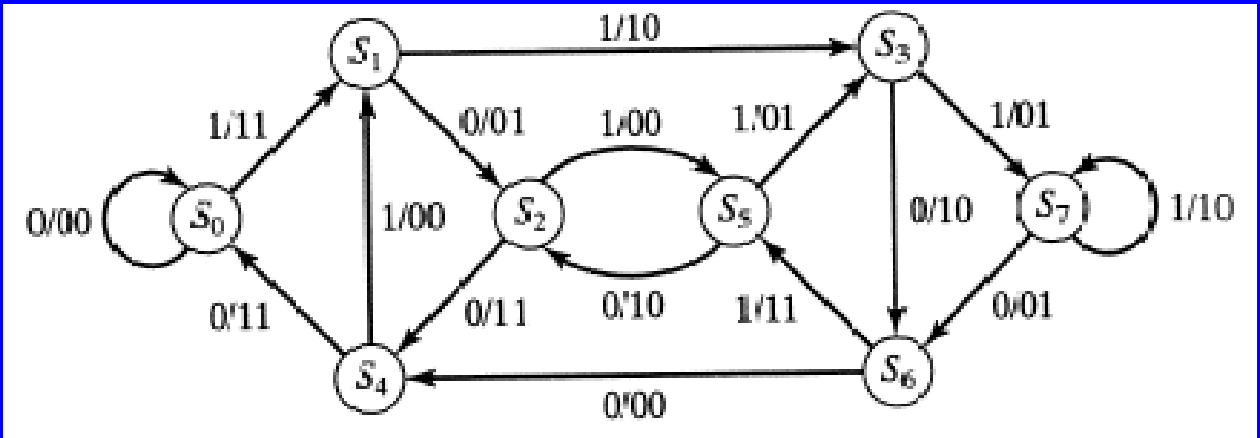

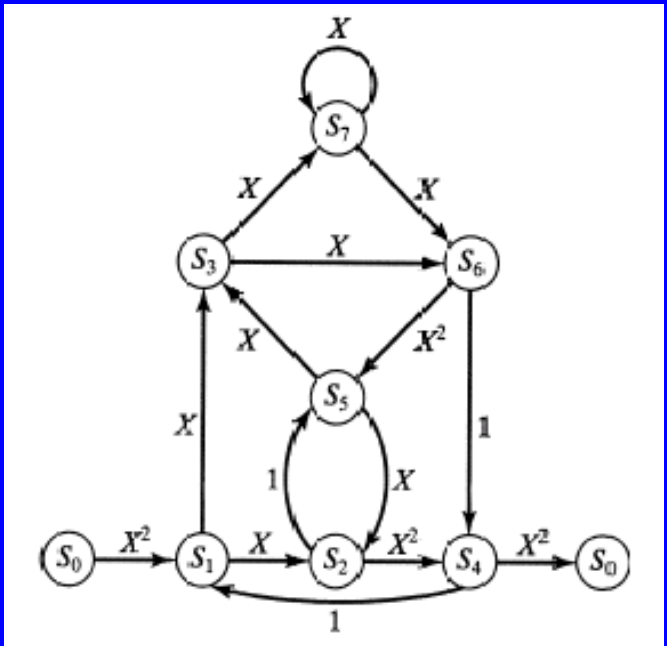

Modified state diagrams for WEF determination

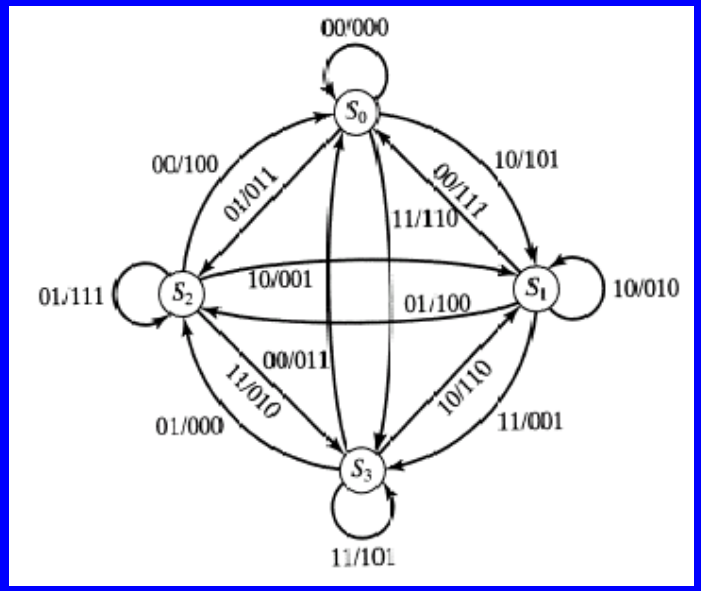

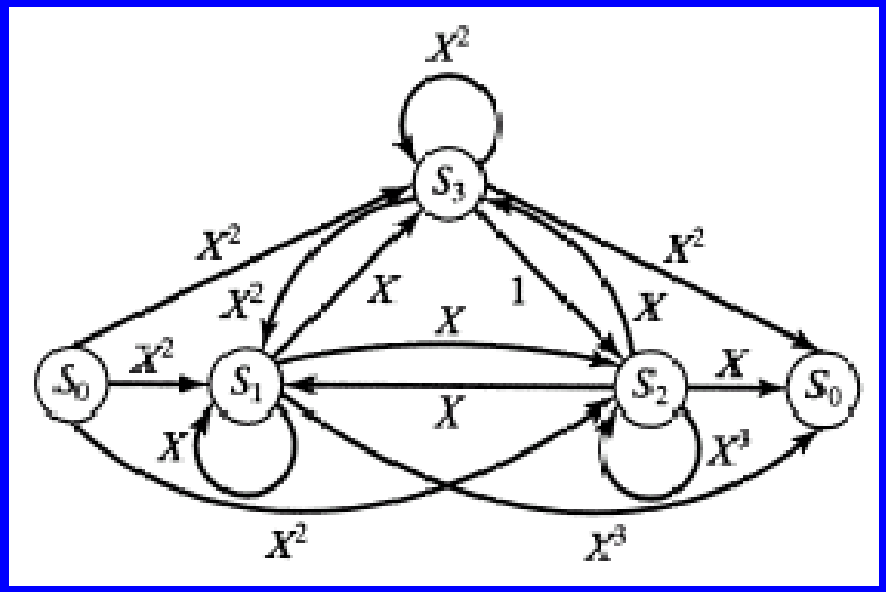

Mason's gain formula

- Want to compute the transfer function $A(X) = \sum_d A_d X^d$
- Definitions:
  - Forward path: Path going from initial to final state, touching each state at most once. There is a finite number of such paths
  - F_i = gain of the ith forward path
  - Cycle: Path starting at one state and coming back to the same state, touching any other state at most once. There is a finite number of such cycles. C_i = gain of the ith cycle
  - $\Delta = 1 - \sum_i C_i + \sum_{i,j} C_i C_j - \sum_{i,j,l} C_i C_j C_l + \ldots$
    (sum over non-intersecting cycles)
  - $\Delta_m = 1 - \sum_i C_i^{(m)} + \sum_{i,j} C_i^{(m)} C_j^{(m)} - \sum_{i,j,l} C_i^{(m)} C_j^{(m)} C_l^{(m)} + \ldots$
    (sum over non-intersecting cycles not touching the mth forward path)
- $A(X) = \sum_i F_i \Delta_i / \Delta$

Example 11.12

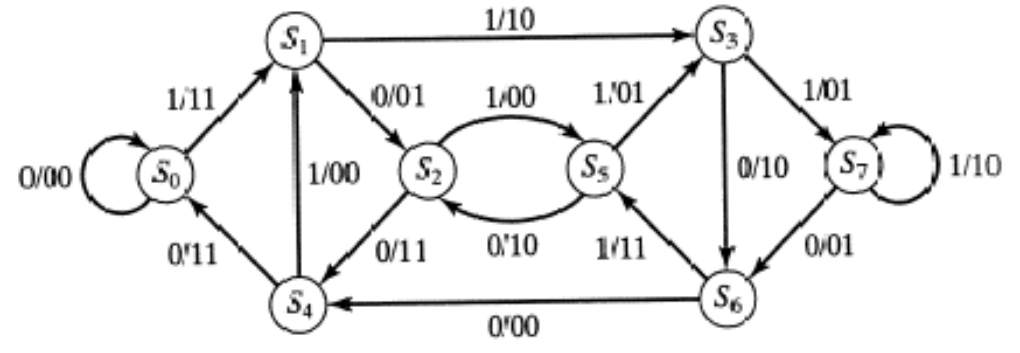

Forward Path 1:	$S_0S_1S_3S_7S_6S_5S_2S_4S_0$	$(F_1 = X^{12})$
Forward Path 2:	$S_0S_1S_3S_7S_6S_4S_0$	$(F_2 = X^7)$
Forward Path 3:	$S_0S_1S_3S_6S_5S_2S_4S_0$	$(F_3 = X^{11})$
Forward Path 4:	$S_0S_1S_3S_6S_4S_0$	$(F_4 = X^6)$
Forward Path 5:	$S_0S_1S_2S_5S_3S_7S_6S_4S_0$	$(F_5 = X^8)$
Forward Path 6:	$S_0S_1S_2S_5S_3S_6S_4S_0$	$(F_6 = X^7)$
Forward Path 7:	$S_0S_1S_2S_4S_0$	$(F_7 = X^7)$

Cycle 1:	$S_1S_3S_7S_6S_5S_2S_4S_1$	$(C_1 = X^8)$
Cycle 2:	$S_1S_3S_7S_6S_4S_1$	$(C_2 = X^3)$
Cycle 3:	$S_1S_3S_6S_5S_2S_4S_1$	$(C_3 = X^7)$
Cycle 4:	$S_1S_3S_6S_4S_1$	$(C_4 = X^2)$
Cycle 5:	$S_1S_2S_5S_3S_7S_5S_4S_1$	$(C_5 = X^4)$
Cycle 6:	$S_1S_2S_5S_3S_6S_4S_1$	$(C_6 = X^3)$
Cycle 7:	$S_1S_2S_4S_1$	$(C_7 = X^3)$
Cycle 8:	$S_2S_5S_2$	$(C_8 = X)$
Cycle 9:	$S_3S_7S_6S_5S_3$	$(C_9 = X^5)$
Cycle 10:	$S_3S_6S_5S_3$	$(C_{10} = X^4)$
Cycle 11:	S_7S_7	$(C_{11} = X)$

Cycle Pair 1:	(Cycle 2, Cycle 8)	$(C_2C_8 = X^4)$
Cycle Pair 2:	(Cycle 3, Cycle 11)	$(C_3C_{11} = X^8)$
Cycle Pair 3:	(Cycle 4, Cycle 8)	$(C_4C_8 = X^3)$
Cycle Pair 4:	(Cycle 4, Cycle 11)	$(C_4C_{11} = X^3)$
Cycle Pair 5:	(Cycle 6, Cycle 11)	$(C_6C_{11} = X^4)$
Cycle Pair 6:	(Cycle 7, Cycle 9)	$(C_7C_9 = X^8)$
Cycle Pair 7:	(Cycle 7, Cycle 10)	$(C_7C_{10} = X^7)$
Cycle Pair 8:	(Cycle 7, Cycle 11)	$(C_7C_{11} = X^4)$
Cycle Pair 9:	(Cycle 8, Cycle 11)	$(C_8C_{11} = X^2)$
Cycle Pair 10:	(Cycle 10, Cycle 11)	$(C_{10}C_{11} = X^5)$

$$\begin{aligned}\Delta &= 1 - (X^8 + X^3 + X^7 + X^2 + X^4 + X^3 + X^3 + X + X^5 + X^4 + X) \\ &\quad + (X^4 + X^8 + X^3 + X^3 + X^4 + X^8 + X^7 + X^4 + X^2 + X^5) - (X^4 + X^8) \\ &= 1 - 2X - X^3. \qquad (11.100)\end{aligned}$$

Cycle Triple 1: (Cycle 4, Cycle 8, Cycle 11)	$(C_4C_8C_{11} = X^4)$
Cycle Triple 2: (Cycle 7, Cycle 10, Cycle 11)	$(C_7C_{10}C_{11} = X^8)$

Example (cont.)

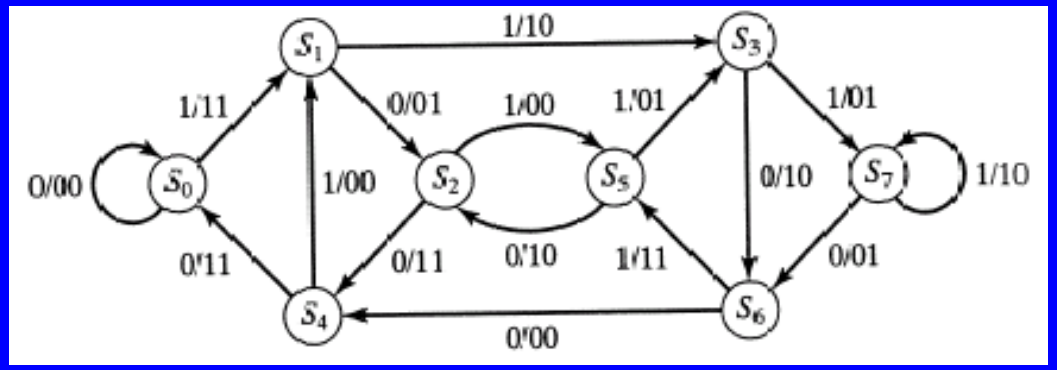

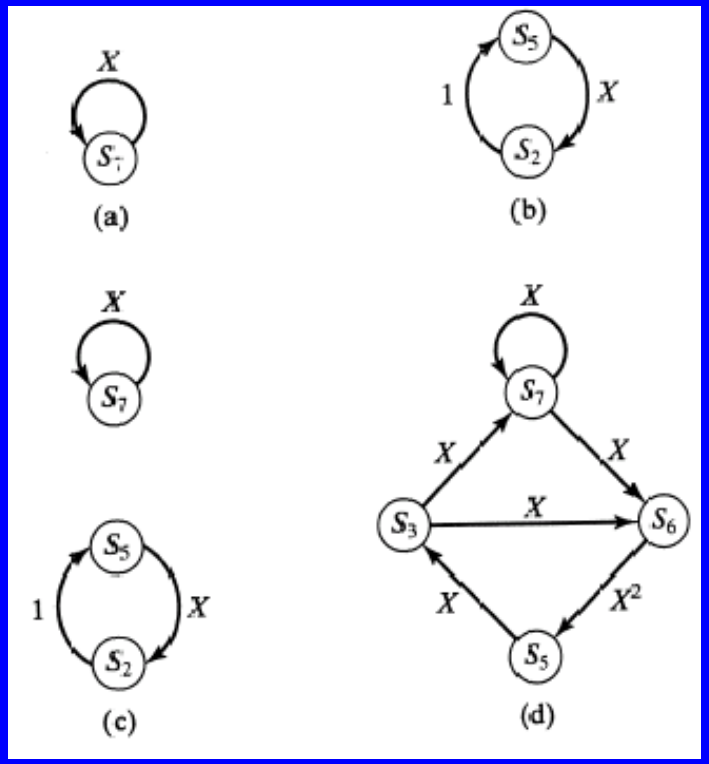

$$A(X) = \frac{X^{12}\cdot 1 + X^7(1-X) + X^{11}(1-X) + X^6(1-2X+X^2) + X^8\cdot 1 + X^7(1-X) + X^7(1-X-X^4)}{1-2X-X^3}$$

$$= \frac{X^6 + X^7 - X^8}{1-2X-X^3}$$

$$= X^6 + 3X^7 + 5X^8 + 11X^9 + 25X^{10} + \cdots .$$

Other weight enumerators

a) Can describe the code parameters in more detail by enhancing the branch labels
   - Multiply label by W^w, where w is the branch input weight
   - Multiply label by L; denoting that each branch has length 1

b) Input-output weight enumerating function (IOWEF)
   - $A(W,X,L) = \sum_{w,d,l} A_{w,d,l} W^w X^d L^l$

Example

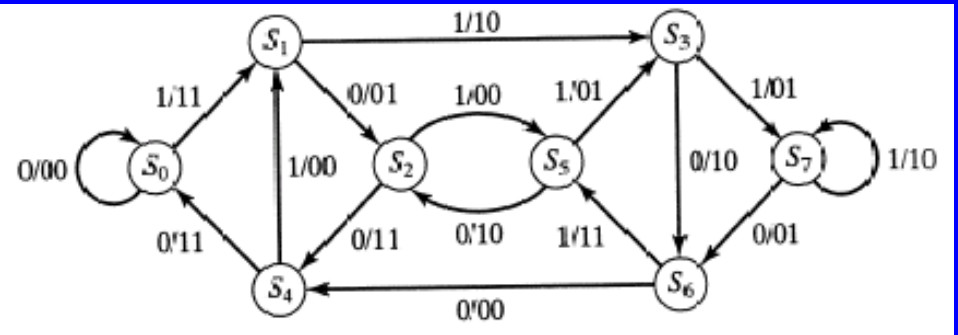

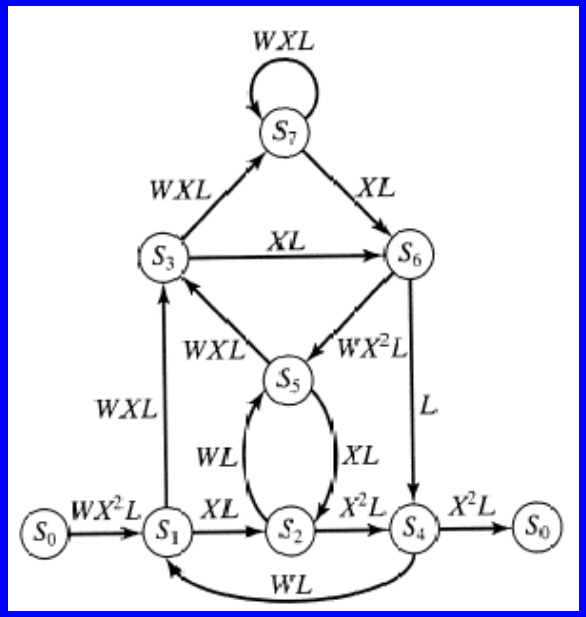

$$
\begin{aligned}
\Delta = 1 &- (X^8W^4L^7 + X^3W^3L^5 + X^7W^3L^6 + X^2W^2L^4 + X^4W^4L^7 + X^3W^3L^6 \\
&+ X^3WL^3 + XWL^2 + X^5W^3L^4 + X^4W^2L^3 + XWL) + (X^4W^4L^7 \\
&+ X^8W^4L^7 + X^3W^3L^6 + X^3W^3L^5 + X^4W^4L^7 + X^8W^4L^7 + X^7W^3L^6 \\
&+ X^4W^2L^4 + X^2W^2L^3 + X^5W^3L^4) - (X^4W^4L^7 + X^8W^4L^7) \\
= 1 &- XW(L + L^2) - X^2W^2(L^4 - L^3) - X^3WL^3 - X^4W^2(L^3 - L^4)
\end{aligned}
$$

$$
\begin{aligned}
\sum_i F_i\Delta_i = X^{12}W^4L^8 \cdot 1 &+ X^7W^3L^6(1 - XWL^2) + X^{11}W^3L^7(1 - XWL) \\
&+ X^6W^2L^5[1 - XW(L + L^2) + X^2W^2L^3] + X^8W^4L^8 \cdot 1 \\
&+ X^7W^3L^7(1 - XWL) + X^7WL^4(1 - XWL - X^4W^2L^3) \\
&= X^6W^2L^5 + X^7WL^4 - X^8W^2L^5. \qquad (11.11
\end{aligned}
$$

$$
\begin{aligned}
A(W, X, L) &= \frac{X^6W^2L^5 + X^7WL^4 - X^8W^2L^5}{1 - XW(L + L^2) - X^2W^2(L^4 - L^3) - X^3WL^3 - X^4W^2(L^3 - L^4)} \\
&= X^6W^2L^5 + X^7(WL^4 + W^3L^6 + W^3L^7) \\
&\quad + X^8(W^2L^6 + W^4L^7 + W^4L^8 + 2W^4L^9) + \cdots . \qquad (11.113)
\end{aligned}
$$